JERGUSON®
A Division Of The Clark-Reliance Corporation
Specialists in Liquid Level Indication

Installation, Operation and Maintenance for

Displacer Level Transmitter

Section: JS100
Bulletin: JS100.06
Date: 10/1/04

FEATURES

- **2 wire 24 VDC Loop Powered**
- **4-20 mA Output**
- **Hart™ Digital Communications**
- **Explosion Proof and I.S. Versions**
- **Simple Local or Remote Calibration**
- **Non-interactive Zero and Span**
- **Level, Contents or interface measurement**
- **Optional local indicator**

DESCRIPTION

The Jerguson Level Transmitter is one of the most advanced available, utilizing the proven buoyancy principle and incorporating state of the art electronics for high reliability and stability.

The transmitter may be mounted directly into a vessel or externally in a chamber to allow isolation for maintenance or in-situ calibration checks. The 4-20mA output from the head is proportional to the level or contents in the vessel, or may be used to measure an interface. The transmitter supports the HART protocol as standard, which is superimposed on the 4-20mA signal. The user may operate the transmitter without digital communications or take advantage of the many features of HART such as remote calibration, re-ranging, on-line diagnostics and multidrop installations.

OPERATION

Changing process liquid level causes the displacer element, which is supported by a spring, to rise or fall. An armature, located in the pressure tube of the head, is directly linked to the displacer and moves vertically with the displacer element. In the enclosure and around the outside of the pressure tube is a Linear Variable Differential Transformer (LVDT) which provides an output proportional to the position of the armature. Sophisticated electronics process the voltage signal from the VCDT into a 4-20mA output signal. The pressure tube is made of stainless steel and is welded to the enclosure fitting effectively containing the process pressure and temperature. This design ensures process conditions are contained and isolated in the pressure vessel.

The displacer length is determined by the operating range (span) specified, the S.G., pressure, and temperature of the process. The diameter and weight are factory calculated to ensure the correct operation and providing accurate 4-20mA output.

Each transmitter is fitted with a visible LED which flashes once every 3 seconds to show the instrument is operating and functioning correctly. The instrument span or zero may be adjusted on line by using the unique calibration plug and a magnet screwdriver.

APPROVALS

CENELEC EEx d IIc T6 Certificate No. Ex 97D1291X
CENELEC EEx ia IIc T5 (-40°C to + 40°C) Certificate No. Ex97D2379X
CENELEC EEX ia IIc T4 (-40°C to + 80°C) Certificate No. Ex97D2379X

ISO 9001 REGISTERED Clark•Reliance

JERGUSON® GAGE AND VALVE
A Division of The Clark • Reliance® Corporation
16633 Foltz Industrial Parkway • Strongsville, OH 44149 USA
Telephone: (440) 572-1500 • Fax: (440) 238-8828

APPLICATIONS

The transmitter will operate in most level measurement applications, including:

- Knock-out pots
- Condensate drums
- Separators
- Flash vessels
- Storage vessels
- Receiver tanks

Most liquids can be measured, with consideration, at operating process temperatures between -76°F to +608°F and pressures between full vacuum and 2200 PSIG (up to 3705 as a special). Typical liquid S.G. range is from 0.25 to 1.5, and interface applications with an S.G. difference of 0.1 are also practical. The range of the instrument is dependent only upon the length of the element specified, though lengths over 10 feet are considered the longest available.

FIELD ADJUSTMENTS

Calibration

The transmitter is configured by the factory to operate in the process conditions advised at the time of order, and the displacer element dimensions are chosen to suit the maximum required span. However, provisions are made to check the calibration once on-site and fine tune the calibration with the instrument in an empty vessel at 20°C, or with the instrument at operating conditions.

Local calibration

Several adjustments may be made in the field using the unique Jerguson Magnetic Scroller" (MMS) and the Calibration plug.

The MMS is a calibration tool with a magnetic tip, and is used to access and adjust certain operating parameters. The level transmitter is fitted with a calibration plug, which contains docking ports for the MMS along with the heartbeat LED. The adjustments which may be made are as follows:

Setting the 4 mA and 20 mA points

May be accomplished locally at the transmitter by using the MMS to "Zero" the device with the level at the required 4 mA point, then to "Span" the device with the level at the 20 mA point. The Zero and Span settings are non-interactive.

An additional feature is the ability to span the instrument without the vessel being filled to the 20 mA point. In this case, the vessel is filled to a known level and the output increased to give the corresponding mA level. The 20 mA point is then electronically calculated by the instrument, provided the output is linear.

Setting the damping

The user can field set the damping (smoothing or response time) using the MMS, to a value up to 100 seconds.

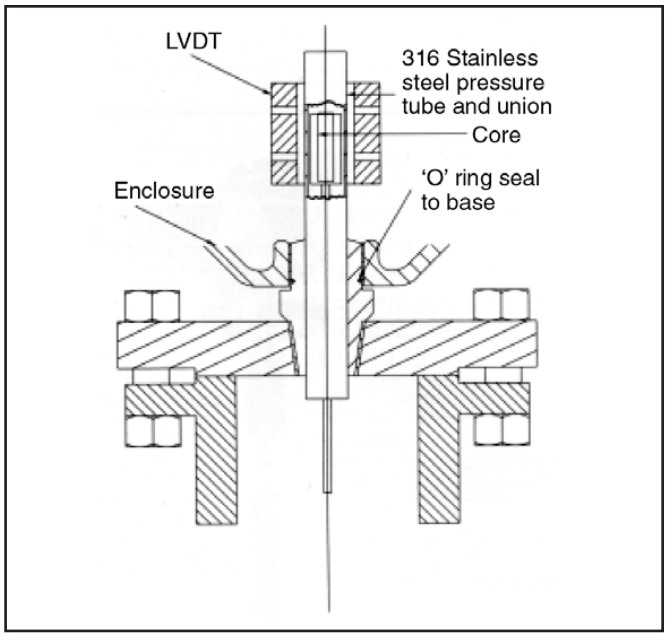

Remote calibration

Remote calibration is not necessary for standard 4-20 mA operation. Alternatively, the ranging may be accomplished by using a "SMART Communicator" to establish digital communications and set the 4 and 20 mA points electronically, without the need for changing the liquid level using HART protocol.

Local indication (optional)

A multi-function LCD indicator housed in a cast aluminum explosion-proof enclosure. The 2 line display can be programmed to show output in percentage, engineering units and other operating parameters.

CONSTRUCTION

Transmitter head

The transmitter head is cast iron with a paint finish of two part Epoxy white paint suitable for offshore or coastal use. Wetted parts are made from stainless steel which include the displacer element, trim and pressure tube. The spring is high alloy Nimonic suitable for corrosive liquids and high temperatures.

Chamber

Where a chamber is specified, only certified materials to ANSI and ASTM are used. Welding is qualified to ASME IX and designed in accordance with ANSI B31.3.

All pressure retaining parts are hydrostatically pressure tested to a minimum of 1.50 times working pressures. Other NDT, including radiography & dye penetrant testing, is available when specified at time of order. Inspection by customers or their appointed agents is welcome, provided this is requested at time of order.

DIMENSIONS

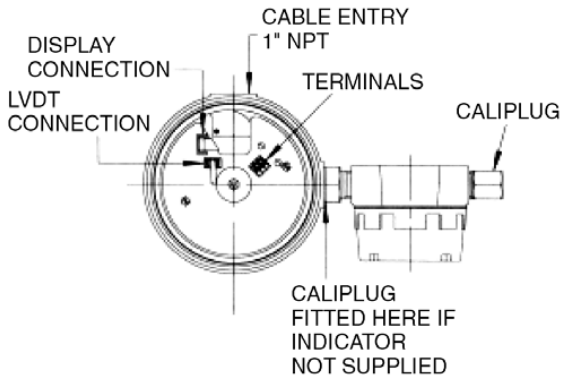

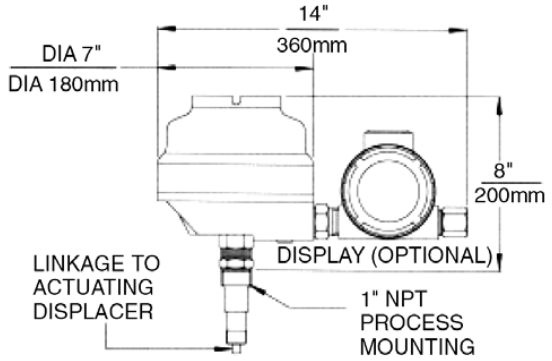

Pressure Tube Type, Condensing Liquids

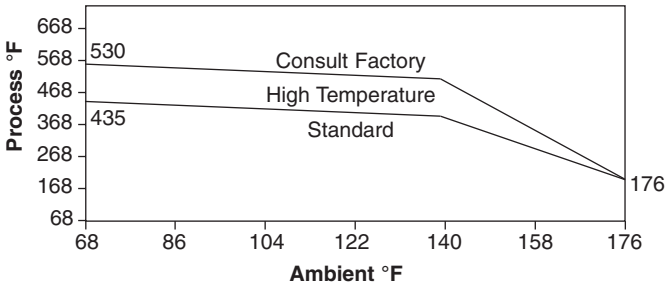

Pressure Tube Type, Non-Condensing Liquids

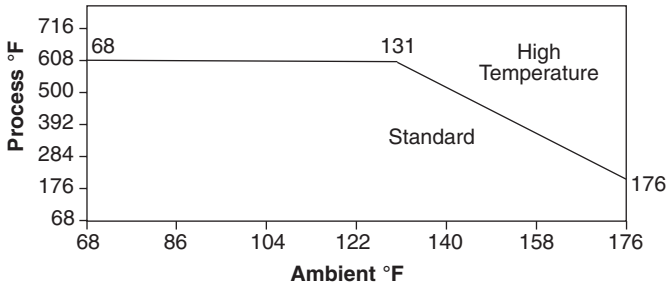

SPECIFICATION

Output	4-20mA SMART/HART digital
Range	10-120 in. (300-3000mm)
Max. operating pressure	2200 PSIG (153 bar) higher as special
Min. operating pressure	Full vacuum
S.G. range	standard 0.25 to 1.5 interface 0.1 difference
Max. operating temp.	608°F (320°C) (non-condensing)
Min. operating temp	-76°F (-60°C)
Ambient temp.	-40° to +176°F
Accuracy	<±1% output span
Repeatability	<±0.2% of output span
Linearity	0.2% of output span
Resolution	0.1% of output span
Hysteresis	0.3% of output span
Power supply	12-40V dc loop powered
Turndown	3 : 1*
Power consumption	21mA/40v:840mW max.

*Refer to installation manual

SMART/HART COMMUNICATOR OPTIONS

Hand Held Communicator

The HHC is fitted with a datapack which allows full access to all of the transmitter parameters.
Ordering information: Model CK1

Universal Hand Held Communicator

The Universal HHC can be programmed with the Device Description (DD) of any registered HART device to allow full access of all the instrument parameters.

H-View

A Windows-based PC programming tool which allows full communication with HART products. H-View provides access to all of the instrument parameters allowing programming and interrogation. Also supported is Dynamic Data Exchange (DDE), which allows export and import of any parameter or measured variable into a Windows package such as Microsoft Excel where dynamic mimics can be displayed.

General note

All HART communicator devices allow access and programming of the universal commands and some common practice commands of any HART instrument, regardless of manufacturer.

ORDERING INFORMATION

JDT	DISPLACER TRANSMITTER

CODE	MATERIAL		
C	Carbon Steel	S	316 SST

CODE	ANSI RATING		
0	150# R.F. ANSI	3	900# R.F. ANSI
1	300# R.F. ANSI	4	1500# RTJ ANSI
2	600# R.F. ANSI	5	2500# RTJ ANSI

CODE	ENCLOSURES		
F	Explosion proof Cl. I, Div. 1 Grps. B, C & D	S	EEx ia (CENELEC) I.S.

CODE	TEMPERATURE RANGE – Select from Chart on page 3		
A	Standard temperature	B	High temperature

CODE	DISPLAY		
N	Without display	D	With display

CODE	CHAMBER – Type & Orientation
A	Not required – Top Mount Flanged
B	Side/bottom with no vent
C	Side/bottom with 1/2" NPT vent
D	Side/bottom with 3/4" NTP vent
F	Side/bottom with 3/4" flanged vent
G	Side/side with 1/2" NPT drain & no vent
H	Side/side with 3/4" NPT drain & no vent
J	Side/side with 1" NPT drain & no vent (std.)
K	Side/side with 1/2" NPT drain & vent
L	Side/side with 3/4" NPT drain & vent
M	Side/side with 1" NPT drain & vent
N	Side/side with 3/4" drain & no vent
P	Side/side with 3/4" flanged drain & 3/4" NPT vent
Q	Side/side with 3/4" flanged drain & 3/4" flanged vent

PROCESS CONNECTIONS

CODE	CHAMBERED	CODE	TOP MOUNTED
01	Screwed 1" NPT	60	3" 150# R.F. ANSI
02	1" Socket Weld	61	3" 300# R.F. ANSI
11	1" ANSI #150 RF	62	3" 600# R.F. ANSI
12	1" ANSI #300 RF	65	4" 150# R.F. ANSI
13	1" ANSI #600 RF	66	4" 300# R.F. ANSI
14	1" ANSI #900 RF	67	4" 600# R.F. ANSI
18	1" ANSI #1500 RTJ	69	6" 150# R.F. ANSi
21	1 1/2" ANSI #150 RF	80	2 1/2" NPT
22	1 1/2" ANSI #300 RF	90	3" NPT
23	1 1/2" ANSI #600 RF		
24	1 1/2" ANSI #900 RF		
28	1 1/2" ANSI #1500 RTJ		
31	2" ANSI #150 RF		
32	2" ANSI #300 RF		
33	2" ANSI #600 RF		
34	2" ANSI #900 RF		
38	2" ANSI #1500 RTJ		

JDT	C	O	F	A	N	B	01	TYPICAL MODEL NUMBER

JERGUSON® GAGE AND VALVE
A Division of The Clark • Reliance® Corporation
16633 Foltz Industrial Parkway • Strongsville, OH 44149 USA
Telephone: (440) 572-1500 • Fax: (440) 238-8828